MITSUBISHI ELECTRIC
AIR CONDITIONING SYSTEMS

PEA-RP250GA

Standard Inverter Heat Pump

R410A Large Capacity Ceiling Concealed Ducted System

The Standard Inverter range provides inverter solutions for customers who want all the benefits that inverters offer, but do not have the budget available for the more expensive Power Inverter range.

- **Static pressure of up to 150Pa**

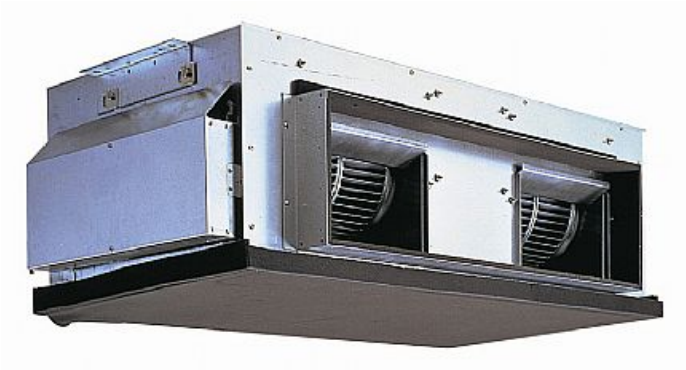

Pictures not to scale

Product Details

PEA-RP250GA Indoor Unit	
Capacity (kW):	
Heating (Nominal) (Low - High)	27.0 (12.5 - 31.5)
Cooling (Nominal) (Low - High)	22.0 (11.2 - 28.0)
Heating (UK) (Low - High)	22.95 (10.65 - 26.8)
Cooling (UK) (Low - High)	19.8 (10.3 - 25.2)
SHF R410A (Nominal)	0.86
Width - mm	1600
Depth - mm	634
Height - mm	400
Weight - kg	77
Airflow (m3/min) - Lo-Hi	64-80
External Static Pressure Pa	150
Noise (dBA) - Lo-Hi	49-52
Pipe Size Gas mm (in)	28.58 (1 1/8)
Pipe Size Liquid mm (in)	12.7 (1/2)
Electrical Supply	380-415v, 50Hz
Phase	3
Fuse Rating (BS88) - HRC (A)	6
Power Input (kW) - Heating (Nominal)	1.18
Power Input (kW) - Cooling (Nominal)	1.18
Power Input (kW) - Heating (UK)	1.05
Power Input (kW) - Cooling (UK)	1.05
Starting Current (A)	5.6
Running Current (A) - Heating / Cooling	2.3 / 2.3
Interconnecting Cable No. Cores	3
Remote Controller Ref	PAR-21MAA

PUHZ-P250YHA Outdoor Unit	
Width - mm	950
Depth - mm	330 + 30
Height - mm	1350
Weight - kg	133
Noise (dBA) (Heating /Cooling) - Lo-Hi	59-59 /59-59
Electrical Supply	380-415v, 50Hz
Phase	3
Fuse Rating (BS88) - HRC (A)	32
Power Input (kW) - Heating (Nominal)	7.29
Power Input (kW) - Cooling (Nominal)	7.26
Power Input (kW) - Heating (UK)	6.49
Power Input (kW) - Cooling (UK)	6.17
Starting Current (A)	5
Running Current (A) - Heating / Cooling	12 / 11
Mains Cable No. Cores	5
Max Pipe Length (m)	70
Max Height Difference (m)	30
Charge R410A (kg) - 30m	7.1

Dimensions

PEA-RP250GA

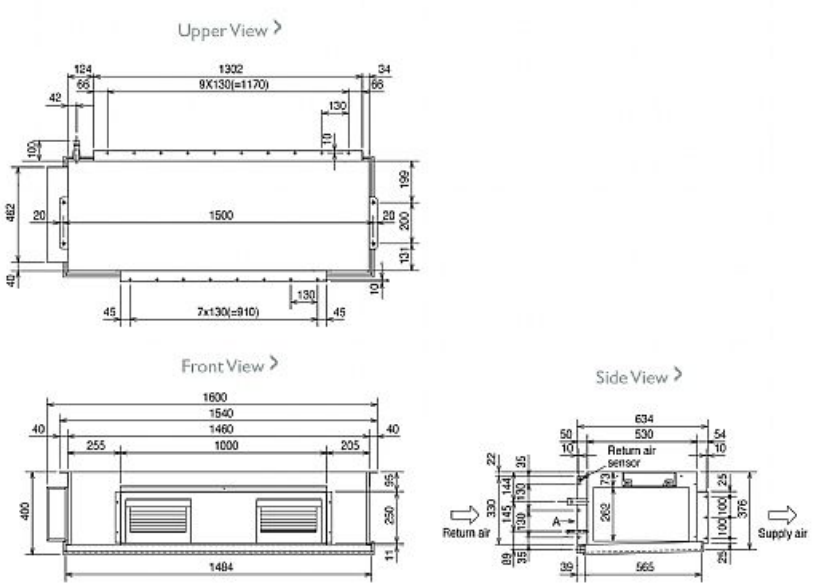

PUHZ-P250YHA

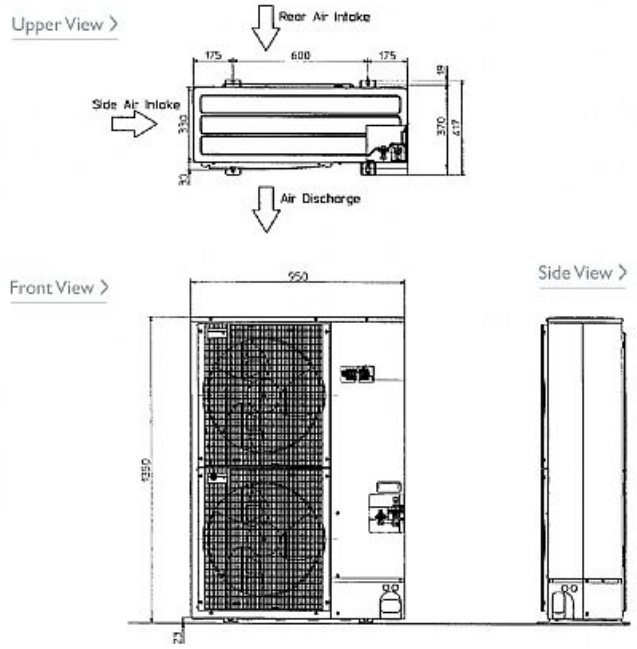

Telephone: 01707 282880
Email: air.conditioning@meuk.mee.com Website: http://www.mitsubishielectric.co.uk/aircon

Mitsubishi Electric reserves the right to make any variation in technical specification to the equipment described, or to withdraw or replace products without prior notification or public announcement.

Tel:
Fax: